## Lovejoy / Sier-Bath Continuous Sleeve Gear Couplings

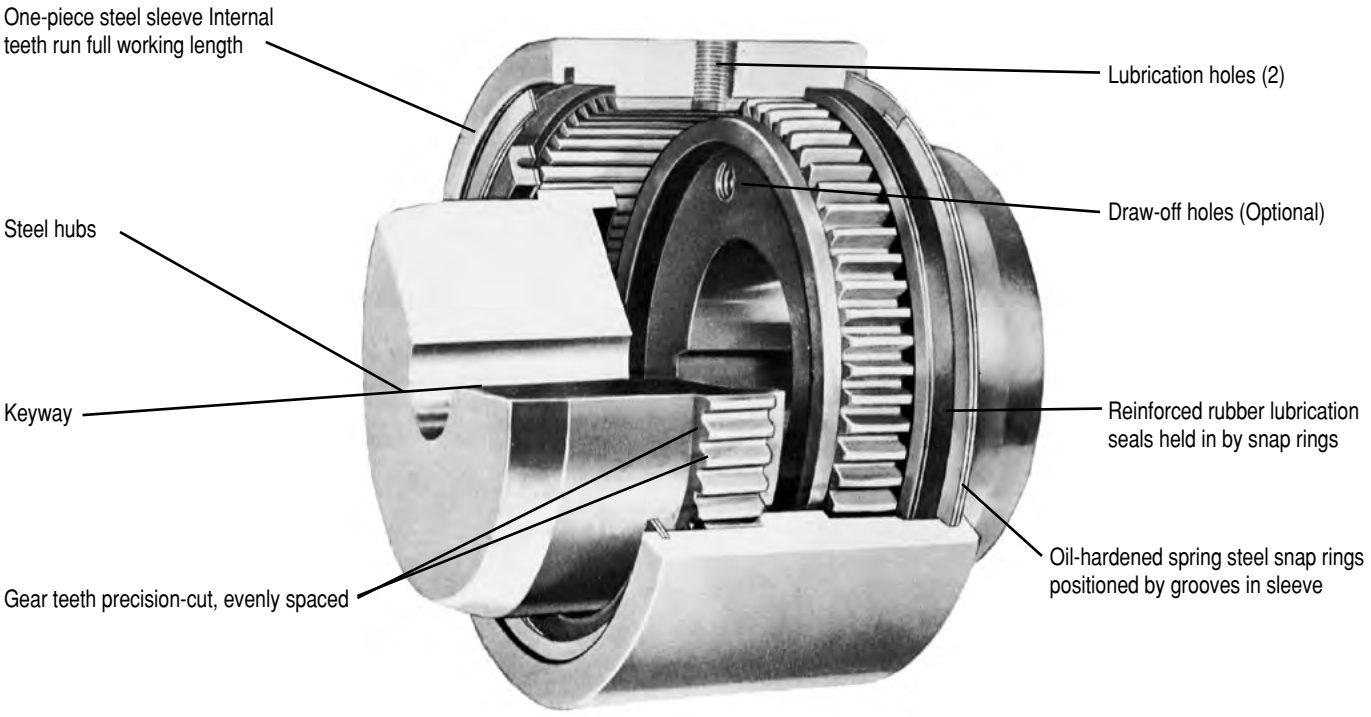


**The One-Piece Sleeve Gear Coupling**

## Lovejoy / Sier-Bath Continuous Sleeve Gear Couplings

### C Type Flex-Flex Couplings

The C Type coupling consists of two flex hubs, one sleeve and one accessory kit consisting of seals and snap rings.

### CFR Type Flex-Rigid Couplings

The CFR Type coupling consist of one flex hub, one rigid hub, one sleeve, one accessory kit consisting of seals and snap rings.

### Features

- Simple and inexpensive type of gear coupling
- All steel sleves and hubs
- Reinforced rubber seals with snap rings to hold lubricant in place
- Available as vertical and horizontal couplings
- Wide variety of special variations such as full-flex, flex-rigid mill motor
- Standard configurations are available of the shelf

G

### *C - CFR Performance Data*

| Size | Nominal Torque in-lb | Nominal Torque Nm | Maximum Speed Unbal RPM | Maximum Speed Bal RPM | ID1 - ID2 Flex & Rigid Max Bore in | ID1 - ID2 Flex & Rigid Max Bore mm | ID1 - ID2 Flex & Rigid Rough Stock Bore in | ID1 - ID2 Flex & Rigid Rough Stock Bore mm | Weight lbs | Weight kg | Parallel Misalignment in | Parallel Misalignment mm | Angular Misalignment Degrees |
|---|---|---|---|---|---|---|---|---|---|---|---|---|---|
| 7/8 | 2,500 | 300 | 6,000 | 18,000 | 1.25 | 31 | Solid with Center | | 5 | 2 | 0.005 | 0.13 | 1/2° per Mesh |
| 1.5 | 7,600 | 900 | 5,000 | 15,000 | 1.63 | 42 | | | 8 | 4 | 0.007 | 0.18 | |
| 2 | 20,200 | 2 300 | 4,200 | 12,600 | 2.13 | 56 | | | 13 | 6 | 0.007 | 0.18 | |
| 2.5 | 30,200 | 3 400 | 3,750 | 11,250 | 2.63 | 70 | | | 20 | 9 | 0.007 | 0.25 | |
| 3 | 50,400 | 5 700 | 3,600 | 9,000 | 3.13 | 84 | | | 33 | 15 | 0.010 | 0.30 | |
| 3.5 | 88,200 | 10 000 | 2,800 | 8,400 | 3.63 | 97 | 1.25 | 32 | 63 | 29 | 0.012 | 0.30 | |
| 4 | 126,000 | 14 200 | 2,400 | 7,200 | 4.13 | 111 | 1.75 | 44 | 91 | 41 | 0.012 | 0.30 | 1/4° per Mesh |
| 4.5 | 184,000 | 20 800 | 2,200 | 6,600 | 4.75 | 130 | 2.38 | 60 | 126 | 57 | 0.007 | 0.18 | |
| 5 | 270,900 | 30 600 | 2,100 | 6,300 | 5.75 | 160 | 2.88 | 73 | 195 | 89 | 0.007 | 0.18 | |
| 6 | 378,000 | 42 700 | 2,000 | 6,000 | 6.75 | 186 | 3.88 | 99 | 267 | 121 | 0.009 | 0.23 | |
| 7 | 598,500 | 67 600 | 1,000 | 3,000 | 7.50 | 200 | 4.69 | 119 | 320 | 145 | 0.010 | 0.25 | |
| 9 | 1,260,000 | 142 400 | 800 | 2,400 | 9.50 | 240 | 5.88 | 149 | 520 | 236 | 0.011 | 0.28 | |
| 11 | 2,205,000 | 249 200 | 600 | 1,800 | 11.50 | 305 | 7.75 | 197 | 925 | 420 | 0.013 | 0.33 | |
| 12 | 2,520,000 | 284 700 | 550 | 1,650 | 12.50 | 330 | 9.75 | 248 | 1,200 | 545 | 0.014 | 0.36 | |

### Ordering Information

- Application: Driver and Driven.
- Type and size of coupling, horizontal, vertical etc.
- Power: Motor horspower or torque requirement.
- Speed: Motor RPM or Driven RPM.
- Distance between shaft ends (BSE).
- Shaft sizes.

## Lovejoy / Sier-Bath Continuous Sleeve Gear Couplings

### C and CFR Type Couplings

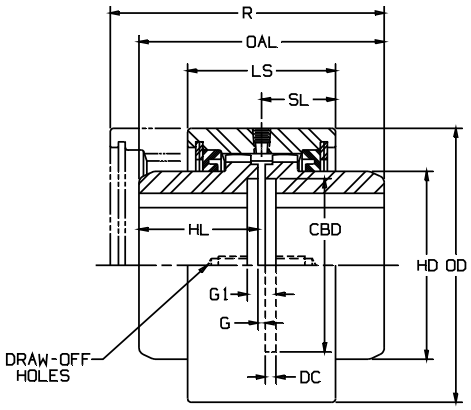


C Type Flex-Flex Coupling

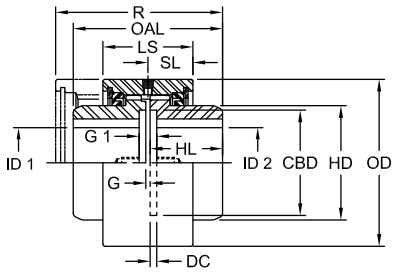


CFR Type Flex-Rigid Coupling

### *C and CFR Type Dimensional Data*

| | R | OAL | LS | SL | ID1 - ID2 | | | | HL | DC | BSE | | OD | HD | CBD |
|---|---|---|---|---|---|---|---|---|---|---|---|---|---|---|---|
| | | | | | Flex & Rigid Max Bore | | Flex & Rigid Rough Stock Bore | | | | G | G1 | | | |
| Size | in | in | in | in | in | mm | in | mm | in | in | in | in | in | in | in |
| 7/8 | 3.75 | 3.13 | 2.00 | 1.00 | 1.25 | 31 | Solid with Center | | 1.50 | 0.13 | 0.13 | 0.38 | 3.31 | 2.00 | 1.94 |
| 1.5 | 4.59 | 3.75 | 2.53 | 1.27 | 1.63 | 42 | | | 1.81 | 0.19 | 0.13 | 0.50 | 3.75 | 2.38 | 2.25 |
| 2 | 4.88 | 4.25 | 2.56 | 1.28 | 2.13 | 56 | | | 2.06 | 0.19 | 0.13 | 0.50 | 4.75 | 3.25 | 3.00 |
| 2.5 | 5.72 | 4.75 | 3.06 | 1.53 | 2.63 | 70 | | | 2.25 | 0.25 | 0.25 | 0.75 | 5.50 | 3.94 | 3.75 |
| 3 | 6.88 | 5.50 | 3.75 | 1.88 | 3.13 | 84 | | | 2.63 | 0.25 | 0.25 | 0.75 | 6.63 | 4.75 | 4.75 |
| 3.5 | 9.25 | 8.75 | 4.00 | 2.00 | 3.63 | 97 | 1.25 | 30 | 4.25 | 0.25 | 0.25 | 0.75 | 7.50 | 5.38 | 5.50 |
| 4 | 9.50 | 9.00 | 4.63 | 2.31 | 4.13 | 111 | 1.75 | 44 | 4.38 | 0.25 | 0.25 | 0.75 | 8.75 | 6.25 | 6.50 |
| 4.5 | 10.38 | 10.25 | 4.88 | 2.44 | 4.75 | 130 | 2.38 | 60 | 5.00 | 0.25 | 0.25 | 0.75 | 9.50 | 7.25 | 7.25 |
| 5 | 12.25 | 12.25 | 5.75 | 2.88 | 5.75 | 160 | 2.88 | 73 | 6.00 | 0.25 | 0.25 | 0.75 | 10.75 | 8.25 | 8.12 |
| 6 | 13.38 | 13.00 | 6.50 | 3.25 | 6.75 | 186 | 3.88 | 99 | 6.38 | 0.25 | 0.25 | 0.75 | 12.25 | 9.50 | 9.25 |
| 7 | 15.38 | 14.88 | 7.50 | 3.75 | 7.50 | 200 | 4.69 | 119 | 7.25 | 0.25 | 0.38 | 0.88 | 14.00 | 10.50 | 9.75 |
| 9 | 19.00 | 19.00 | 8.13 | 4.06 | 9.50 | 240 | 5.88 | 149 | 9.25 | 0.25 | 0.50 | 1.00 | 16.25 | 12.63 | 12.25 |
| 11 | 22.50 | 22.50 | 8.13 | 4.06 | 11.50 | 305 | 7.75 | 197 | 11.00 | 0.25 | 0.50 | 1.00 | 19.25 | 15.63 | 15.00 |
| 12 | 25.00 | 25.00 | 8.38 | 4.19 | 12.50 | 330 | 9.75 | 248 | 12.25 | 0.25 | 0.50 | 1.00 | 20.50 | 16.50 | 16.00 |

**Ordering Information**

- Puller Holes are standard on sizes 4 through 12.
- Puller Holes are available for sizes 7/8 through 3.5 at an additional charge.
- The BSE (distance Between Shaft Ends) may vary between G and G1.
- Interference bores with no set screws are standard unless otherwise specified.
- Inch bores and keyway tolerances conform to ANSI / AGMA 9002-B04.
- For metric bores and keyway tolerances, consult Lovejoy Engineering Section.
- Larger sizes are available, please consult Lovejoy Technical Support.

## Lovejoy / Sier-Bath Continuous Sleeve Gear Couplings

### CMM Type Mill Motor Couplings

The CMM Type coupling consists of one standard flex hub, one universal hub, one standard sleeve and one accessary kit consisting of seals and snap rings.

### Features

- Specifically designed for mill motors with tapered bores
- Universal hub counterbored for the nut on the end of the motor shaft
- One piece cylindrical sleeve for smoother, faster, quieter and and safer operation
- Quick assembly and disassembly

### *CMM Type Performance Data*

| Size | Nominal Torque | | Maximum Speed | | ID1 - ID2 Max Bore | | ID1 - ID2 Rough Stock Bore | | Weight | | Parallel Misalignment | | Max Angular Misalignment Degrees |
|---|---|---|---|---|---|---|---|---|---|---|---|---|---|
| | in-lb | Nm | Unbal RPM | Bal RPM | in | mm | in | mm | lbs | kg | in | mm | |
| **7/8** | 2,500 | 300 | 6,000 | 18,000 | 1.25 | 31 | 0.44 | 11 | 7 | 3.2 | 0.005 | .13 | 1/2° |
| **1.5** | 7,600 | 900 | 5,000 | 15,000 | 1.63 | 42 | 0.63 | 16 | 11 | 5.0 | 0.007 | .18 | |
| **2** | 20,200 | 2 300 | 4,200 | 12,600 | 2.13 | 56 | 0.73 | 19 | 19 | 8.6 | 0.007 | .18 | |
| **2.5** | 30,200 | 3 400 | 3,750 | 11,250 | 2.63 | 70 | 0.88 | 22 | 29 | 13.0 | 0.007 | .18 | |
| **3** | 50,400 | 5 700 | 3,600 | 9,000 | 3.13 | 84 | 1.19 | 30 | 46 | 21.0 | 0.010 | .25 | |
| **3.5** | 88,200 | 10 000 | 2,800 | 8,400 | 3.63 | 97 | 1.25 | 32 | 77 | 35.0 | 0.012 | .30 | 1/4° |
| **4** | 126,000 | 14 200 | 2,400 | 7,200 | 4.13 | 111 | 1.75 | 44 | 109 | 49.0 | 0.012 | .30 | |
| **4.5** | 184,000 | 20 800 | 2,200 | 6,600 | 4.75 | 130 | 2.38 | 60 | 155 | 70.0 | 0.007 | .18 | |
| **5** | 270,000 | 30 600 | 2,100 | 6,300 | 5.75 | 160 | 2.88 | 73 | 220 | 100.0 | 0.007 | .18 | |
| **6** | 378,000 | 42 700 | 2,000 | 6,000 | 6.75 | 186 | 3.88 | 99 | 315 | 143.0 | 0.009 | .23 | |

### Ordering Information

- Application: Driver and Driven.
- Type and size of coupling, horizontal, vertical etc.
- Power: Motor horspower or torque requirement.
- Speed: Motor RPM or Driven RPM.
- Distance between shaft ends (BSE).
- Shaft sizes.
- Length and taper per foot of Mill Motor shaft.
- Size of nut to be used on Mill Motor (DC1 and CBD1).
- Specify if keyways are to be parallel to shaft axis or tapered.

## Lovejoy / Sier-Bath Continuous Sleeve Gear Couplings

### CMM Type Mill Motor Couplings

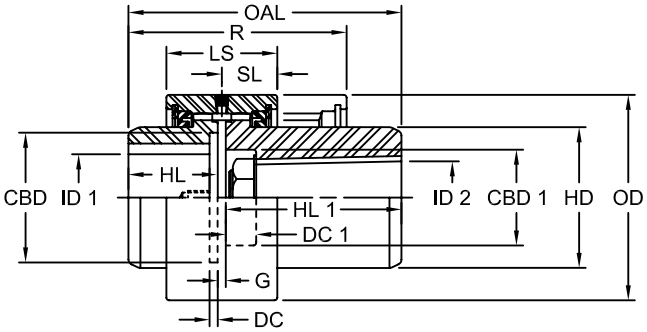


Standard Type

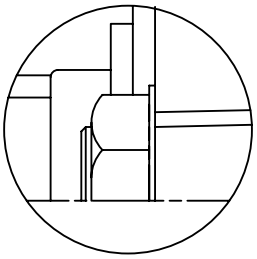

Alternative Type

### *CMM Type Dimensional Data*

| Size | OAL in | R in | LS in | SL in | ID1 - ID2 Max Bore in | ID1 - ID2 Max Bore mm | ID1 - ID2 Rough Stock Bore in | ID1 - ID2 Rough Stock Bore mm | HL in | HL1 in | DC in | DC1 in | G in | OD in | HD in | CBD in | CBD 1 in |
|---|---|---|---|---|---|---|---|---|---|---|---|---|---|---|---|---|---|
| 7/8 | Determined by Length of Mill Motor Hub | 3.75 | 2.00 | 1.00 | 1.25 | 31 | 0.44 | 11 | 1.50 | 3.75 | 0.13 | Determined by Customer Specifications | 0.13 | 3.31 | 2.00 | 1.94 | 1.63 |
| 1.5 | | 4.59 | 2.53 | 1.27 | 1.63 | 42 | 0.63 | 16 | 1.81 | 4.00 | 0.19 | | 0.13 | 3.75 | 2.38 | 2.25 | 1.88 |
| 2 | | 4.88 | 2.56 | 1.28 | 2.13 | 56 | 0.73 | 19 | 2.06 | 4.63 | 0.19 | | 0.13 | 4.75 | 3.25 | 3.00 | 2.75 |
| 2.5 | | 5.72 | 3.06 | 1.53 | 2.63 | 70 | 0.88 | 22 | 2.25 | 5.13 | 0.25 | | 0.25 | 5.50 | 3.94 | 3.75 | 3.25 |
| 3 | | 6.88 | 3.75 | 1.88 | 3.13 | 84 | 1.19 | 30 | 2.63 | 5.75 | 0.25 | | 0.25 | 6.63 | 4.75 | 4.75 | 3.88 |
| 3.5 | | 9.25 | 4.00 | 2.00 | 3.63 | 97 | 1.25 | 32 | 4.25 | 6.50 | 0.25 | | 0.25 | 7.50 | 5.38 | 5.50 | 4.50 |
| 4 | | 9.50 | 4.63 | 2.31 | 4.13 | 111 | 1.75 | 44 | 4.38 | 6.63 | 0.25 | | 0.25 | 8.75 | 6.25 | 6.50 | 5.13 |
| 4.5 | | 10.38 | 4.88 | 2.44 | 4.75 | 130 | 2.38 | 60 | 5.00 | 7.75 | 0.25 | | 0.25 | 9.50 | 7.25 | 7.25 | 5.50 |
| 5 | | 12.25 | 5.75 | 2.88 | 5.75 | 160 | 2.88 | 73 | 6.00 | 7.88 | 0.25 | | 0.25 | 10.75 | 8.25 | 8.13 | 6.50 |
| 6 | | 13.38 | 6.50 | 3.25 | 6.75 | 186 | 3.88 | 99 | 6.38 | 9.25 | 0.25 | | 0.25 | 12.25 | 9.50 | 9.25 | 7.75 |

**Ordering Information**

- HL1 Dimensions are the maximum lengths of Universal hubs kept in stock and altered to customer specifications. Longer length hubs are made to order.
- Dimension CBD1 as shown is the maximum safe counterbore. Diameter of this counterbore is to customer specifications.
- Rough bore mill motor hubs are manufactured to HL1 length with straight bores.
- Puller Holes are standard on sizes 4 through 12.
- Puller Holes are available for sizes 7/8 through 3.5 at an additional charge.
- Interference bores with no set screws are standard unless otherwise specified.
- Inch bores and keyway tolerances conform to ANSI / AGMA 9002-B04.
- For metric bores and keyway, consult Lovejoy Engineering Section.
- Larger sizes are available, please consult Lovejoy Technical Support.

## Lovejoy / Sier-Bath Continuous Sleeve Gear Couplings

### CFS Type Floating Shaft Coupling

The CFS Type coupling consists of two flex-rigid (CFR) couplings with a shaft between them. Normally the driver and driven ends are rigid while the two center hubs connected by the center shaft are flexible. These hubs can be reversed if necessary without sacrificing ease of installation or disassembly.

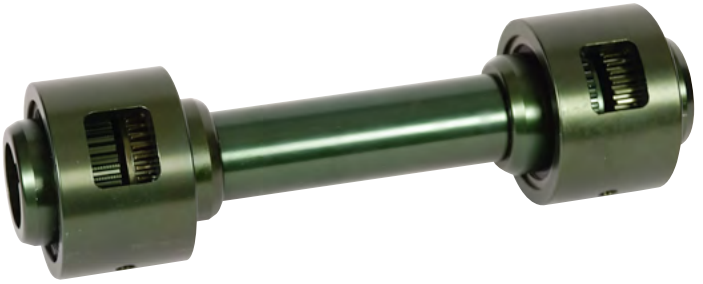

G

### *CFS Type Performance Data*

| Size | Nominal Torque in-lb | Nominal Torque Nm | Maximum Speed Unbal RPM | Maximum Speed Bal RPM | ID1 - ID2 Flex & Rigid Max Bore in | ID1 - ID2 Flex & Rigid Max Bore mm | ID1 - ID2 Flex & Rigid Rough Stock Bore in | ID1 - ID2 Flex & Rigid Rough Stock Bore mm | Weight Coupling Only lbs | Weight Coupling Only kg | Parallel Misalignment in | Parallel Misalignment mm | Max Angular Misalignment Degrees |
|---|---|---|---|---|---|---|---|---|---|---|---|---|---|
| **7/8** | 2,500 | 300 | 6,000 | 18,000 | 1.25 | 31 | 0.44 | 11 | 10 | 4.5 | 0.005 | .13 | |
| **1.5** | 7,600 | 900 | 5,000 | 15,000 | 1.63 | 42 | 0.63 | 16 | 16 | 7.3 | 0.007 | .18 | |
| **2** | 20,200 | 2 300 | 4,200 | 12,600 | 2.13 | 56 | 0.73 | 19 | 26 | 12.0 | 0.007 | .18 | 1/2° |
| **2.5** | 30,200 | 3 400 | 3,750 | 11,250 | 2.63 | 70 | 0.88 | 22 | 40 | 18.0 | 0.007 | .18 | |
| **3** | 50,400 | 5 700 | 3,600 | 9,000 | 3.13 | 84 | 1.19 | 30 | 66 | 30.0 | 0.010 | .25 | |
| **3.5** | 88,200 | 10 000 | 2,800 | 8,400 | 3.63 | 97 | 1.25 | 32 | 126 | 57.0 | 0.012 | .30 | |
| **4** | 126,000 | 14 200 | 2,400 | 7,200 | 4.13 | 111 | 1.75 | 44 | 182 | 83.0 | 0.012 | .30 | |
| **4.5** | 184,000 | 20 800 | 2,200 | 6,600 | 4.75 | 130 | 2.38 | 60 | 252 | 114.0 | 0.007 | .18 | 1/4° |
| **5** | 270,000 | 30 600 | 2,100 | 6,300 | 5.75 | 160 | 2.88 | 73 | 390 | 177.0 | 0.007 | .18 | |
| **6** | 378,000 | 42 700 | 2,000 | 6,000 | 6.75 | 186 | 3.88 | 99 | 534 | 242.0 | 0.009 | .23 | |

**Ordering Information**

- Application: Driver and Driven.
- Type and size of coupling, horizontal, vertical etc.
- Power: Motor horspower or torque requirement.
- Speed: Motor RPM or Driven RPM.
- Distance between shaft ends (BSE).
- Shaft sizes.

## Lovejoy / Sier-Bath Continuous Sleeve Gear Couplings

### CFS Type Floating Shaft Couplings

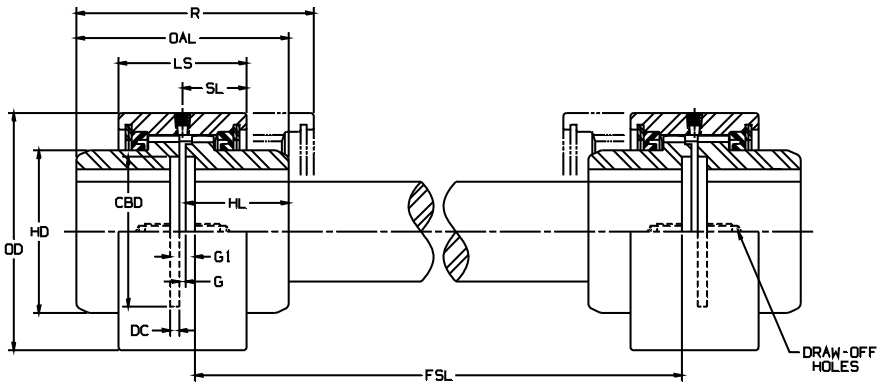


### *CFS Type Dimensional Data*

| Size | R in | OAL in | LS in | SL in | ID1 - ID2 Flex & Rigid Max Bore in | ID1 - ID2 Flex & Rigid Max Bore mm | ID1 - ID2 Flex & Rigid Rough Stock Bore in | ID1 - ID2 Flex & Rigid Rough Stock Bore mm | HL in | DC in | BSE Min in | G in | G1 in | OD in | HD in | CBD in |
|---|---|---|---|---|---|---|---|---|---|---|---|---|---|---|---|---|
| **7/8** | 3.75 | 3.13 | 2.00 | 1.00 | 1.25 | 31 | 0.44 | 11 | 1.50 | 0.13 | 3.75 | 0.13 | 0.38 | 3.31 | 2.00 | 1.94 |
| **1.5** | 4.59 | 3.75 | 2.53 | 1.27 | 1.63 | 42 | 0.63 | 16 | 1.81 | 0.19 | 4.63 | 0.13 | 0.50 | 3.75 | 2.38 | 2.25 |
| **2** | 4.88 | 4.25 | 2.56 | 1.28 | 2.13 | 56 | 0.73 | 19 | 2.06 | 0.19 | 5.13 | 0.13 | 0.50 | 4.75 | 3.25 | 3.00 |
| **2.5** | 5.72 | 4.75 | 3.06 | 1.53 | 2.63 | 70 | 0.88 | 22 | 2.25 | 0.25 | 6.00 | 0.25 | 0.75 | 5.50 | 3.94 | 3.75 |
| **3** | 6.88 | 5.50 | 3.75 | 1.88 | 3.13 | 84 | 1.19 | 30 | 2.63 | 0.25 | 6.75 | 0.25 | 0.75 | 6.63 | 4.75 | 4.75 |
| **3.5** | 9.25 | 8.75 | 4.00 | 2.00 | 3.63 | 97 | 1.25 | 32 | 4.25 | 0.25 | 9.50 | 0.25 | 0.75 | 7.50 | 5.38 | 5.50 |
| **4** | 9.50 | 9.00 | 4.63 | 2.31 | 4.13 | 111 | 1.75 | 44 | 4.38 | 0.25 | 9.75 | 0.25 | 0.75 | 8.75 | 6.25 | 6.50 |
| **4.5** | 10.38 | 10.25 | 4.88 | 2.44 | 4.75 | 130 | 2.38 | 60 | 5.00 | 0.25 | 11.00 | 0.25 | 0.75 | 9.50 | 7.25 | 7.25 |
| **5** | 12.25 | 12.25 | 5.75 | 2.88 | 5.75 | 160 | 2.88 | 73 | 6.00 | 0.25 | 13.00 | 0.25 | 0.75 | 10.75 | 8.25 | 8.13 |
| **6** | 13.38 | 13.00 | 6.50 | 3.25 | 6.75 | 186 | 3.88 | 99 | 6.38 | 0.25 | 13.75 | 0.25 | 0.75 | 12.25 | 9.50 | 9.25 |

Notes:
- FSL Dimension is the minimum length of the floating shaft.
- The BSE (distance Between Shaft Ends) vary between G and G1.
- Puller Holes are standard on sizes 4 through 6.
- Puller Holes are available for sizes 7/8 through 3.5 at an additional charge.
- Interference bores with no set screws are standard unless otherwise specified.
- Inch bores and keyway tolerances conform to ANSI / AGMA 9002-B04.
- For metric bores and keyway tolerances, consult Lovejoy Engineering Section.
- Larger sizes are available, please consult Lovejoy Technical Support.

## Lovejoy / Sier-Bath Continuous Sleeve Gear Couplings

### CSPCR Type Spacer Couplings

The CSPCR Type coupling consists of two flex hubs, two sleeves, one spacer, one accessory kit, two split seals and two lock rings.

### Features

- Easy removal of hubs without disturbing the mounting of connected units
- Spacer teeth are rigid with a slight interference fit with the mating flex hub
- Split seals on the spacer

### *CSPCR Type Performance Data*

| Size | Nominal Torque in-lb | Nominal Torque Nm | Maximum Speed[1] Unbal RPM | Maximum Speed[1] Bal RPM | ID1 - ID2 Max Bore in | ID1 - ID2 Max Bore mm | ID1 - ID2 Rough Stock Bore in | ID1 - ID2 Rough Stock Bore mm | Weight Couplings Only lbs | Weight Couplings Only kg | Parallel Misalignment in | Parallel Misalignment mm | Max Angular Misalignment Degrees |
|---|---|---|---|---|---|---|---|---|---|---|---|---|---|
| **7/8** | 2,500 | 300 | 6,000 | 18,000 | 1.25 | 31 | Solid | | 7 | 3.2 | 0.005 | .13 | 1/2° per Mesh |
| **1.5** | 7,600 | 900 | 5,000 | 15,000 | 1.63 | 42 | | | 11 | 5.0 | 0.007 | .18 | |
| **2** | 20,200 | 2 300 | 4,200 | 12,600 | 2.13 | 56 | | | 16 | 7.3 | 0.007 | .18 | |
| **2.5** | 30,200 | 3 400 | 3,750 | 11,250 | 2.63 | 70 | | | 26 | 12.0 | 0.007 | .18 | |
| **3** | 50,400 | 5 700 | 3,600 | 9,000 | 3.13 | 84 | | | 43 | 20.0 | 0.010 | .25 | |
| **3.5** | 88,200 | 10 000 | 2,800 | 8,400 | 3.63 | 97 | | | 79 | 36.0 | 0.012 | .30 | 1/4° per mesh |
| **4** | 126,000 | 14 200 | 2,400 | 7,200 | 4.13 | 111 | 1.75 | 44 | 115 | 52.0 | 0.012 | .30 | |
| **4.5** | 184,000 | 20 800 | 2,200 | 6,600 | 4.75 | 130 | 2.38 | 60 | 158 | 72.0 | 0.007 | .18 | |
| **5** | 270,000 | 30 600 | 2,100 | 6,300 | 5.75 | 160 | 2.88 | 73 | 248 | 113.0 | 0.007 | .18 | |
| **6** | 378,000 | 42 700 | 2,000 | 6,000 | 6.75 | 186 | 3.88 | 99 | 340 | 154.0 | 0.009 | .23 | |

Note: ■ 1 indicates: Maximum RPM of spacer coupling determined by critical speed of spacer shaft.

### Ordering Information

- Application: Driver and Driven.
- Type and size of coupling, horizontal, vertical etc.
- Power: Motor horspower or torque requirement.
- Speed: Motor RPM or Driven RPM.
- Distance between shaft ends (BSE).
- Shaft sizes.

## Lovejoy / Sier-Bath Continuous Sleeve Gear Couplings

### CSPCR Type Spacer Couplings

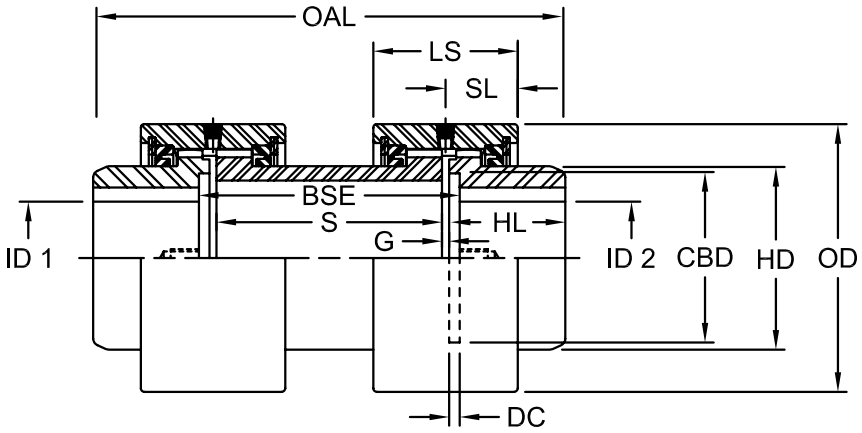


### *CSPCR Type Dimensional Data*

| Size | OAL Min in | LS in | SL in | ID1 - ID2 Max Bore in | ID1 - ID2 Max Bore mm | ID1 - ID2 Rough Stock Bore in | ID1 - ID2 Rough Stock Bore mm | BSE Min in | S Min in | HL in | G in | DC in | OD in | HD in | CBD in |
|---|---|---|---|---|---|---|---|---|---|---|---|---|---|---|---|
| **7/8** | 6.76 | 2.00 | 1.00 | 1.25 | 31 | Solid | | 4.00 | 3.50 | 1.50 | 0.13 | 0.13 | 3.31 | 2.00 | 1.94 |
| **1.5** | 7.38 | 2.53 | 1.27 | 1.63 | 42 | | | 4.13 | 3.50 | 1.81 | 0.13 | 0.19 | 3.75 | 2.38 | 2.25 |
| **2** | 8.51 | 2.56 | 1.28 | 2.13 | 56 | | | 4.75 | 4.13 | 2.06 | 0.13 | 0.19 | 4.75 | 3.25 | 3.00 |
| **2.5** | 9.50 | 3.06 | 1.53 | 2.63 | 70 | | | 5.50 | 4.50 | 2.25 | 0.25 | 0.25 | 5.50 | 3.94 | 3.75 |
| **3** | 11.01 | 3.75 | 1.88 | 3.13 | 84 | | | 6.25 | 5.25 | 2.63 | 0.25 | 0.25 | 6.63 | 4.75 | 4.75 |
| **3.5** | 15.00 | 4.00 | 2.00 | 3.63 | 97 | | | 7.00 | 6.00 | 4.25 | 0.25 | 0.25 | 7.50 | 5.38 | 5.50 |
| **4** | 15.89 | 4.63 | 2.31 | 4.13 | 111 | 1.75 | 44 | 7.63 | 6.63 | 4.38 | 0.25 | 0.25 | 8.75 | 6.25 | 6.50 |
| **4.5** | 17.38 | 4.88 | 2.44 | 4.75 | 130 | 2.38 | 60 | 7.88 | 6.88 | 5.00 | 0.25 | 0.25 | 9.50 | 7.25 | 7.25 |
| **5** | 20.25 | 5.75 | 2.88 | 5.75 | 160 | 2.88 | 73 | 8.75 | 7.75 | 6.00 | 0.25 | 0.25 | 10.75 | 8.25 | 8.13 |
| **6** | 21.76 | 6.50 | 3.25 | 6.75 | 186 | 3.88 | 99 | 9.50 | 8.50 | 6.38 | 0.25 | 0.25 | 12.25 | 9.50 | 9.25 |

Notes:
- Puller Holes are standard on sizes 4 through 6.
- Puller Holes are available for sizes 7/8 through 3.5 at an additional charge.
- Interference bores with no set screws are standard unless otherwise specified.
- Inch bores and keyway tolerances conform to ANSI / AGMA 9002-B04.
- For metric bores and keyway tolerances, consult Lovejoy Engineering Section.
- Larger sizes are available, please consult Lovejoy Technical Support.

## Lovejoy / Sier-Bath Continuous Sleeve Gear Couplings

### CCS Type Cut-Out Shifter Couplings

The CCS Type coupling consists of two flex hubs, one special sleeve without lubrication holes and one accessory kit which includes a special seal for the hub that disengages to elliminate undue friction when the disengaged hub is turning in the sleeve. Standard hub is hand packed with grease.

### Features

- Permits quick disengagement of driver and driven shafts without disassembling the coupling
- Widely used on dual drives and equipment operated in tandem
- Special seal for disengaging hub
- Also available with pins to maintain sleeve in both engaged and disengaged positions

G

### *CCS Type Performance Data*

| Size | Nominal Torque in-lb | Nominal Torque Nm | Maximum Speed Unbal RPM | Maximum Speed Bal RPM | ID1 - ID2 Max Bore in | ID1 - ID2 Max Bore mm | ID1 - ID2 Rough Stock Bore in | ID1 - ID2 Rough Stock Bore mm | Weight lbs | Weight kg | Parallel Misalignment in | Parallel Misalignment mm | Max Angular Misalignment Degrees |
|---|---|---|---|---|---|---|---|---|---|---|---|---|---|
| **7/8** | 2,500 | 300 | 6,000 | 18,000 | 1.25 | 31 | 0.44 | 11 | | | 0.005 | .13 | |
| **1.5** | 7,600 | 900 | 5,000 | 15,000 | 1.63 | 42 | 0.63 | 16 | Weight | | 0.007 | .18 | |
| **2** | 20,200 | 2 300 | 4,200 | 12,600 | 2.13 | 56 | 0.73 | 19 | Determined | | 0.007 | .18 | 1/2° |
| **2.5** | 30,200 | 3 400 | 3,750 | 11,250 | 2.63 | 70 | 0.88 | 22 | by | | 0.007 | .18 | |
| **3** | 50,400 | 5 700 | 3,600 | 9,000 | 3.13 | 84 | 1.19 | 30 | W & OD | | 0.010 | .25 | |
| **3.5** | 88,200 | 10 000 | 2,800 | 8,400 | 3.63 | 97 | 1.25 | 32 | Dimensions | | 0.012 | .30 | |
| **4** | 126,000 | 14 200 | 2,400 | 7,200 | 4.13 | 111 | 1.75 | 44 | supplied | | 0.012 | .30 | |
| **4.5** | 184,000 | 20 800 | 2,200 | 6,600 | 4.75 | 130 | 2.38 | 60 | by | | 0.007 | .18 | 1/4° |
| **5** | 270,000 | 30 600 | 2,100 | 6,300 | 5.75 | 160 | 2.88 | 73 | Customer | | 0.007 | .18 | |
| **6** | 378,000 | 42 700 | 2,000 | 6,000 | 6.75 | 186 | 3.88 | 99 | | | 0.009 | .23 | |

### Ordering Information

- Application: Driver and Driven.
- Type and size of coupling, horizontal, vertical etc.
- Power: Motor horspower or torque requirement.
- Speed: Motor RPM or Driven RPM.
- Distance between shaft ends (BSE).
- Shaft sizes.
- Dimensions of Shifter Groove (width and outside diameter).
- Specify which hub will be stationary when coupling is disengaged.

## Lovejoy / Sier-Bath Continuous Sleeve Gear Couplings

### CCS Type Cut-Out Shifter Couplings

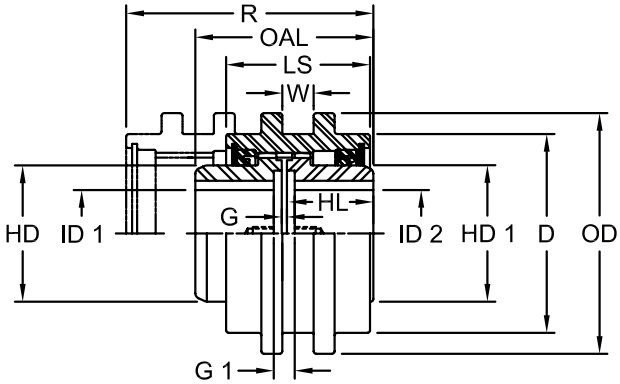


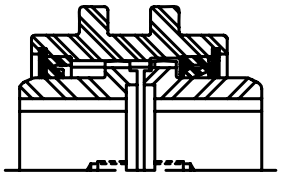

Disengaged Position

### *CCS Type Dimensional Data*

| Size | R in | OAL in | LS in | W in | ID1 - ID2 Max Bore in | ID1 - ID2 Max Bore mm | ID1 - ID2 Rough Stock Bore in | ID1 - ID2 Rough Stock Bore mm | HL in | BSE G in | BSE G1 in | OD in | D in | HD1 in | HD in | T[1] in |
|---|---|---|---|---|---|---|---|---|---|---|---|---|---|---|---|---|
| **7/8** | 4.31 | 3.13 | 2.56 | | 1.25 | 31 | 0.44 | 11 | 1.50 | 0.13 | 0.38 | | 3.31 | 1.985 | 2.00 | 0.38 |
| **1.5** | 5.38 | 3.75 | 3.31 | Per | 1.63 | 42 | 0.63 | 16 | 1.81 | 0.13 | 0.50 | Per | 3.75 | 2.365 | 2.38 | 0.63 |
| **2** | 5.75 | 4.25 | 3.44 | Cust | 2.13 | 56 | 0.73 | 19 | 2.06 | 0.13 | 0.50 | Cust | 4.75 | 3.235 | 3.25 | 0.56 |
| **2.5** | 6.41 | 4.75 | 3.88 | Specs | 2.63 | 70 | 0.88 | 22 | 2.25 | 0.25 | 0.75 | Specs | 5.50 | 3.925 | 3.94 | 0.69 |
| **3** | 7.69 | 5.50 | 4.63 | | 3.13 | 84 | 1.19 | 30 | 2.63 | 0.25 | 0.75 | | 6.63 | 4.735 | 4.75 | 0.75 |
| **3.5** | 9.63 | 8.75 | 4.88 | | 3.63 | 97 | 1.25 | 32 | 4.25 | 0.25 | 0.75 | | 7.50 | 5.365 | 5.38 | 0.81 |
| **4** | 10.69 | 9.00 | 5.81 | | 4.13 | 111 | 1.75 | 44 | 4.38 | 0.25 | 0.75 | | 8.75 | 6.235 | 6.25 | 1.00 |
| **4.5** | 11.44 | 10.25 | 5.94 | | 4.75 | 130 | 2.38 | 60 | 5.00 | 0.25 | 0.75 | | 9.50 | 7.235 | 7.25 | 1.00 |
| **5** | 14.00 | 12.25 | 7.50 | | 5.75 | 160 | 2.88 | 73 | 6.00 | 0.25 | 0.75 | | 10.75 | 8.235 | 8.25 | 1.50 |
| **6** | 15.44 | 13.00 | 8.56 | | 6.75 | 186 | 3.88 | 99 | 6.38 | 0.25 | 0.75 | | 12.25 | 9.485 | 9.50 | 1.88 |

Notes:
- 1 indicates: T is the length of travel to disengage sleeve.
- The BSE (distance Between Shaft Ends) vary between G and G1.
- Puller Holes are standard on sizes 4 through 6.
- Puller Holes are available for sizes 7/8 through 3.5 at an additional charge.
- Interference bores with no set screws are standard unless otherwise specified.
- Inch bores and keyway tolerances conform to ANSI / AGMA 9002-B04.
- For metric bores and keyway tolerances, consult Lovejoy Engineering Section.
- Larger sizes are available, please consult Lovejoy Technical Support.

## Lovejoy / Sier-Bath Continuous Sleeve Gear Couplings

### CSHP Type Shear Pin Couplings

The CSHP Type coupling consists of one standard flex hub, two piece shear hub and one set of shear pins, one standard sleeve and accessory kit.

### Features

- Designed to prevent damage to connected equipment
- Manufactured to shear at predetermined loads
- New Pins can be quickly inserted

### *CSHP Type Performance Data*

| Size | Nominal Torque | | Maximum Speed | | ID1 - ID2 Flex or Rigid Max Bore | | ID1 - ID2 Shear Hub Max Bore | | Weight | | Parallel Misalignment | | Max Angular Misalignment Degrees |
|---|---|---|---|---|---|---|---|---|---|---|---|---|---|
| | in-lb | Nm | Unbal RPM | Bal RPM | in | mm | in | mm | lbs | kg | in | mm | |
| **1.5** | 7,600 | 900 | 5,000 | 15,000 | 1.63 | 42 | 0.938 | 24 | 8 | 4 | 0.007 | .18 | 1/2° |
| **2** | 20,200 | 2 300 | 4,200 | 12,600 | 2.13 | 56 | 1.500 | 38 | 10 | 5 | 0.007 | .18 | |
| **2.5** | 30,200 | 3 400 | 3,750 | 11,250 | 2.63 | 70 | 1.750 | 44 | 15 | 7 | 0.007 | .18 | |
| **3** | 50,400 | 5 700 | 3,600 | 9,000 | 3.13 | 84 | 2.250 | 57 | 23 | 10 | 0.010 | .25 | |
| **3.5** | 88,200 | 10 000 | 2,800 | 8,400 | 3.63 | 97 | 2.625 | 66 | 47 | 21 | 0.012 | .30 | 1/4° |
| **4** | 126,000 | 14 200 | 2,400 | 7,200 | 4.13 | 111 | 3.625 | 92 | 90 | 41 | 0.012 | .30 | |
| **4.5** | 184,000 | 20 800 | 2,200 | 6,600 | 4.75 | 130 | 4.125 | 104 | 112 | 51 | 0.007 | .18 | |
| **5** | 270,000 | 30 600 | 2,100 | 6,300 | 5.75 | 160 | 4.500 | 114 | 177 | 80 | 0.007 | .18 | |
| **6** | 378,000 | 42 700 | 2,000 | 6,000 | 6.75 | 186 | 5.875 | 149 | 250 | 114 | 0.009 | .23 | |

### Ordering Information

- Application: Driver and Driven.
- Type and size of coupling, horizontal, vertical etc.
- Power: Motor horspower or torque requirement.
- Speed: Motor RPM or Driven RPM.
- Distance between shaft ends (BSE).
- Shaft sizes.
- Specify which is the Shear Pin hub.
- Specify the required shear torque.

## Lovejoy / Sier-Bath Continuous Sleeve Gear Couplings

### CSHP Type Spacer Couplings

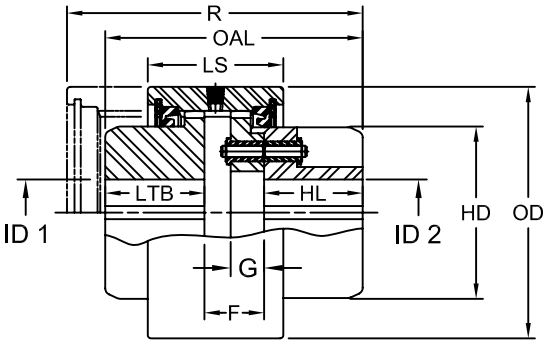


### *CSHP Type Dimensional Data*

| Size | R in | OAL in | LS in | SL in | ID1 Flex or Rigid Max Bore in | ID1 Flex or Rigid Max Bore m | ID2 Shear Hub Max Bore in | ID2 Shear Hub Max Bore mm | LTB in | HL in | G in | F in | OD in | HD in |
|---|---|---|---|---|---|---|---|---|---|---|---|---|---|---|
| **1.5** | 5.28 | 4.38 | 2.53 | 1.27 | 1.63 | 42 | 0.938 | 24 | 1.63 | 2.25 | 0.50 | 1.13 | 3.75 | 2.38 |
| **2** | 5.56 | 4.88 | 2.56 | 1.28 | 2.13 | 56 | 1.500 | 38 | 1.88 | 2.50 | 0.50 | 1.13 | 4.75 | 3.25 |
| **2.5** | 6.50 | 5.44 | 3.06 | 1.53 | 2.63 | 70 | 1.750 | 44 | 2.00 | 2.69 | 0.75 | 1.50 | 5.50 | 3.94 |
| **3** | 7.75 | 6.38 | 3.75 | 1.88 | 3.13 | 84 | 2.250 | 57 | 2.38 | 3.25 | 0.75 | 1.63 | 6.63 | 4.75 |
| **3.5** | 8.13 | 8.13 | 4.00 | 2.00 | 3.63 | 97 | 2.625 | 66 | 4.00 | 3.38 | 0.75 | 1.75 | 7.50 | 5.38 |
| **4** | 9.50 | 9.00 | 4.63 | 2.31 | 4.13 | 111 | 3.625 | 92 | 4.13 | 4.13 | 0.75 | 2.00 | 8.75 | 6.25 |
| **4.5** | 9.88 | 9.75 | 4.88 | 2.44 | 4.75 | 130 | 4.125 | 104 | 4.75 | 4.25 | 0.75 | 2.00 | 9.50 | 7.25 |
| **5** | 11.50 | 11.50 | 5.75 | 2.88 | 5.75 | 160 | 4.500 | 114 | 5.75 | 5.00 | 0.75 | 2.25 | 10.75 | 8.25 |
| **6** | 13.13 | 13.00 | 6.50 | 3.25 | 6.75 | 186 | 5.875 | 149 | 6.13 | 6.13 | 0.75 | 2.88 | 12.25 | 9.50 |

Notes:
- Puller Holes are standard on sizes 4 through 6.
- Puller Holes are available for sizes 1.5 through 3.5 at an additional charge.
- Interference bores with no set screws are standard unless otherwise specified.
- Inch bores and keyway tolerances conform to ANSI / AGMA 9002-B04.
- For metric bores and keyway tolerances, consult Lovejoy Engineering Section.
- Larger sizes are available, please consult Lovejoy Technical Support.